Shamsi School

Shamsi Society Campus Boy's Shift

Final Term Exam 2026

Class VI	Subject: Mathematics	Time: 3 hours
Student's Name:_____	Section: _____	Roll #:_____ Date: _____

Final Term	Objective Marks	Activity	Subjective Marks	Total
Marks Obtained				
Max. Marks	25	5	70	100

Check by: _____

Re-check by:_____

Objective: (Marks:25)

Q1) Choose the best answers. **/10**

i) Find the square of 25

a) 625 b) 825 c) 425

ii) On the number line which is greater –15 or –3?

a) –15 b) –3 c) They are equal

iii) The value of 5 × (–3) – (–3) is

a) 18 b) –18 c) –12

iv) The smallest prime number between 90 and 100 is

a) 91 b) 97 c) 93

v) LCM of 12, 24 and 48 is

a) 12 b) 96 c) 48

vi) If 100% = Rs 120, then Rs 84 is

a) 70% b) 30% c) 120%

vii) Simplify: 2x + y – (x + y)

a) x + y b) x c) y

viii) If $4x + 8 = 24$, then the value of x is

a) 8 b) 16 c) 4

ix) Interior angles of a triangle add up to

a) 180° b) 300° c) 90°

x) Which of these is not a part of a bar graph?

a) X-axis b) Sector c) Scale

Q2) Fill in the blanks. **/5**

i) A unit set is also called a _____.

ii) The number of elements in a set is called its _____.

iii) LCM stands for _____.

iv) The symbol **%** is used to denote _____.

v) A _____ is a symbol that represents a quantity the value of which is not known.

Q3) Match the correct answers: **/5**

i) Area of triangle is	Pie chart
ii) A diagram that uses sectors of a circle to display data	Whole number
iii) Length × breadth	$\frac{1}{2}$ (b × h)
iv) The set of natural numbers with 0 added to it	Addition
v) Integers satisfy the closure property of	Area of rectangle

Q4) True and False statements **/5**

i) A set of all the children in a school is a finite set. _____

ii) The symbol or number appearing before the variable used in an algebraic term is called its coefficient.____

iii) Volume of a cuboid = length × base × breadth. _____

iv) Mode cannot be more than 1. _____

v) HCF of 2000 and 3000 is 1000. _____

SUBJECTIVE (70)

ARITHEMATIC (Marks: 25)

Note: Attempt any five (5) questions. Each question carry equal marks.

Q1) Write one example of each of the given set (any 2)

i) Finite set
ii) Empty set
iii) Universal set
iv) Infinite set
v) Unit set

Q2) Simplify (any 1)

i) $\{ 18 \text{ of } (2.5 \div 1.2 - 0.9) - 4.25 \} - (8.5 \times 10 + 4)$
ii) $20 - [14 - \{ 18 - (20 - 6 - 3) \}]$
iii) $4\frac{2}{3} \times \frac{3}{11} + [4\frac{3}{4} \div 2\frac{1}{4} \times (- 1\frac{2}{3})] + (- \frac{1}{3})$

Q3) Find the square of the following numbers (any 2)

i) 21
ii) 35
iii) 81
iv) 49

Q4) Find the difference of the square of 65 and the square of 45.

Q5) Find the LCM of the following numbers by the common - multiple method. (any 1)

i) 8 , 9 and 12
ii) 10 , 15 and 20

Q6) Find the LCM of the following numbers by prime factorization. (any 1)

i) 12 , 16 and 20
ii) 28 , 35 , 56 and 84
iii) 32 , 36 and 48

Q7) Mr John covered 40% of a total journey of 150 km. While Mr Robert covered 36% of a total journey of 300km. Who covered more distance?

Q8) Express the first quantity as a percentage of the second quantity (any 2)

i) 65cm , 6m
ii) 40 minutes , 8 hours
iii) 18 days , 30 days

Q9) The price of a book decreased from Rs 320 to Rs 240. Find the percentage decreased in the price of the book.

ALGEBRA (Marks 15)

Note: Attempt any three (3) questions. Each question carry equal marks.

Q1) Simplify. (any 1)

i) $5a - [\ 3b - \{\ 4a - (\ 5b - 6a - 7b\ )\}]$
ii) $3\ \{\ a - 2\ (\ b - a - b\ )$
iii) $5x - \{\ 3x + (\ 4x - 2x\ )\ \}$

Q2) Rehan buys a book and a pen and pays Rs 60 for both The book costs Rs 18 more than twice the cost of the pen. Find the cost of the book.

Q3) The sum of three consecutive even integers is 36. Find the smallest of them.

Q4) Twice a number added to half of itself of equals 40. Find the number.

GEOMETRY (Marks 20)

Note: Attempt any four (4) questions. Each question carry equal marks.

Q1) Find the area of each of the following rectangular fields whose dimensions are given (any 1)

i) Length = 20 m , breadth = 8 m
ii) Length = 4.5 m , breadth = 2m 25 cm

Q2) A tank is 8m long, 4m wide and 2.5 m high. How many cubic meters of water can it hold?

Q3) Find the volume of each of the cubes whose edges are given below. (any 2)

i) 2.5 m
ii) 40 cm
iii) $2\frac{2}{3}$ m

Q4) Find the volume of each of the following cuboids. (any 1)

i) Length = 10cm, breadth = 8cm, height= 4cm
ii) Length= 2m 50cm , breadth = 1m , height = 75 cm

Q5) Find the area of each of the following squares whose dimensions are given (any 2)

Q6) How many 3cm cubes can be cut out of a cube whose volume is 135 cubic centimeter.

Q7) Calculate the perimeter of each of the following figures (any 1)

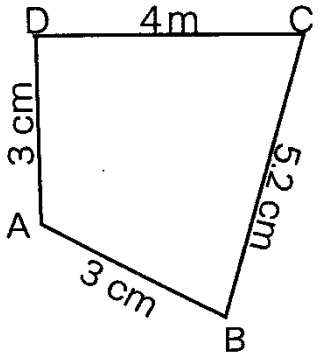

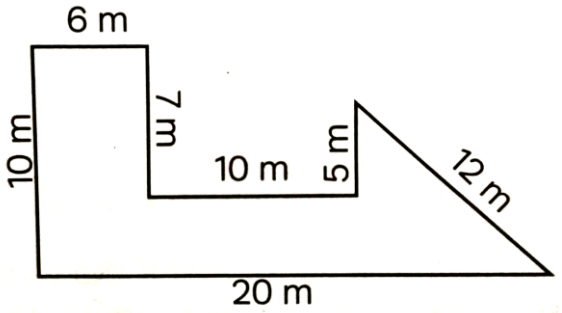

STATISTICS (Marks 10)

Note: Note: Attempt any one (1) questions. Each question carry equal marks..

Q1) Answer the following questions with the help of bar graph.

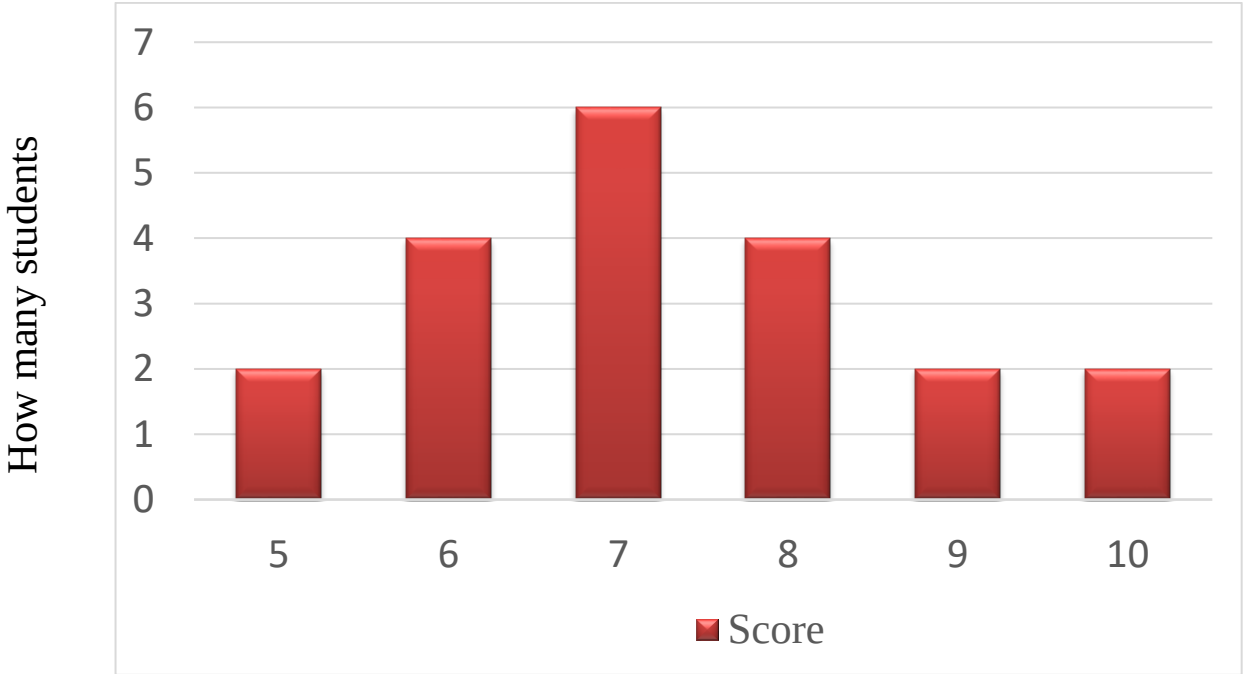

1) How many students got at least 7?
2) How many students did really well (got 9 or 10)?
3) How did the quiz go overall?
4) What was the most common score?
5) How many students got that?
6) How many students did poorly (got 5 or 6)?

Q2) Read the bar graph and answer the following questions:

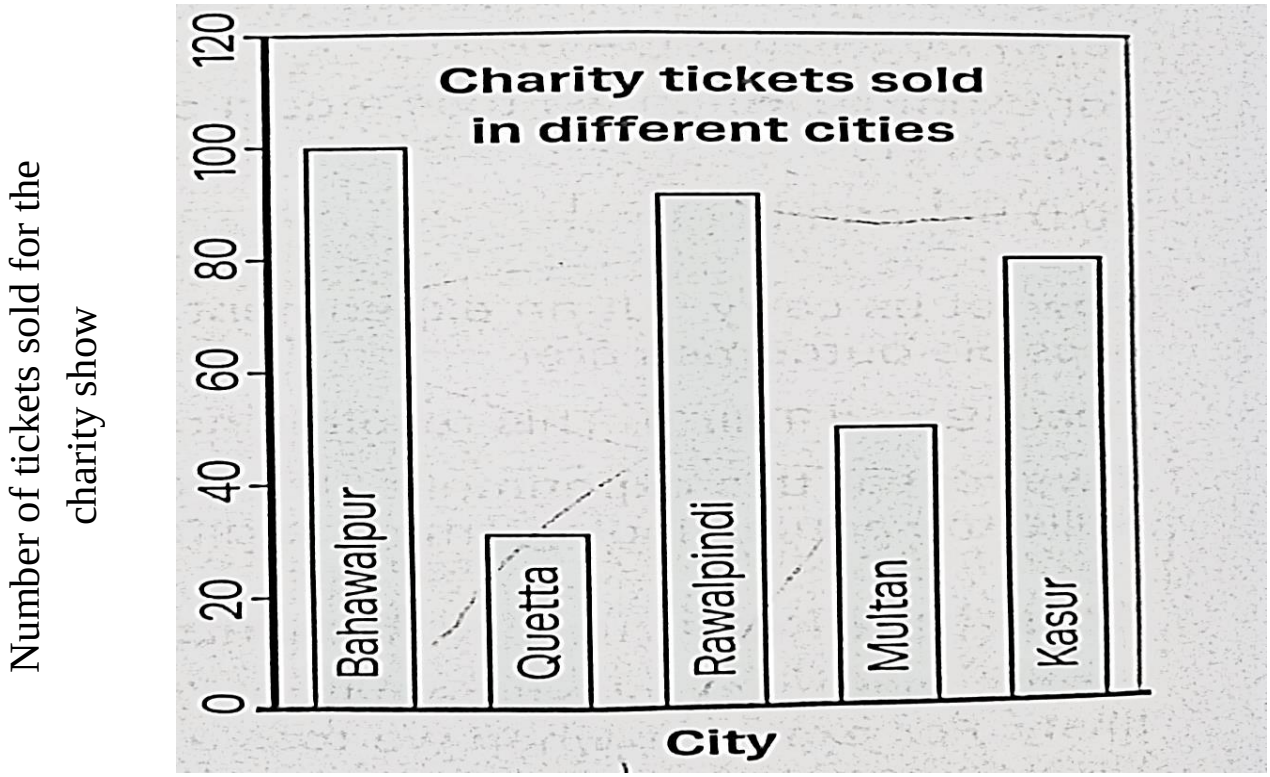

1) What is the general information given by the graph?
2) How many tickets of the Charity Show were sold by the agents in total?
3) In which city was the maximum number of tickets sold?
4) In which city was the maximum number of tickets sold?
5) The number of tickets sold in Bahawalpur is twice that of tickets sold in Multan is this true or false?